KTH Informations- och kommunikationsteknik

# Written exam
# IE1206 Embedded Electronics
# IF1330 Electrical principles
# Friday 17/8 2018 08.00-12.00

---

## General Information

Examiner: Carl-Mikael Zetterling

Responsible teacher at exam: Per-Erik Hellström 08-790 43 25

**All sheets** that are handed in need **your name and personal number** written on them.
**Mark every sheet** with the **problem it deals** with.
**You cannot have more than one problem per sheet.**

**Aids: Calculator**

The exam consists of 8 problems (5 points each) distributed over the 4 modules in the course:
Module 1: problem 1 and 2
Module 2: problem 3 and 4
Module 3: problem 5 and 6
Module 4: problem 7 and 8

To **pass the exam** requires at least **2 points** from each module and preliminary **20 points** in total.
**Grades** are given as follows:

| Points | <20 | 20-23 | 24-27 | 28-31 | 32-35 | 36-40 |
|---|---|---|---|---|---|---|
| Grades | F | E | D | C | B | A |

1. Determine the electrical power consumed in $R_3$.
   $R_1$=10 kΩ, $R_2$=0.4 kΩ, $R_3$=2 kΩ, $V_1$=3.2 V, $I_o$=7 mA.

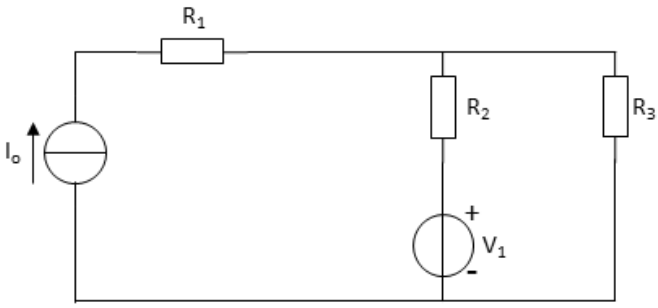


2. Determine the Thevenin equivalent circuit seen at A-B.
   $V_1$=6 V, $R_1$=1.5 kΩ, $R_2$= 4 kΩ.

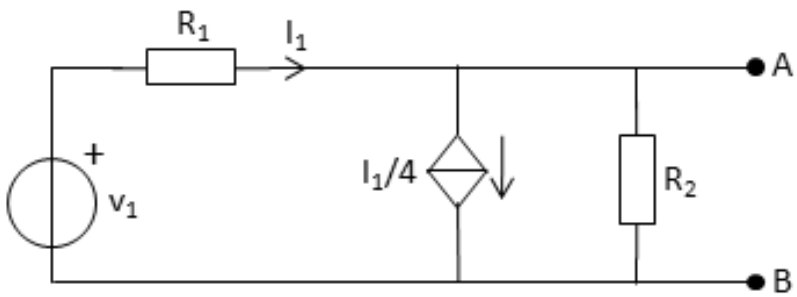


3. The light emitting diode (LED) has a threshold voltage $V_T$=2.0 V. $R_1$=1 kΩ and $R_2$=2 kΩ. Determine the current $I_o$ needed to have a current of 1 mA flowing through the LED so that it emits light brightly.

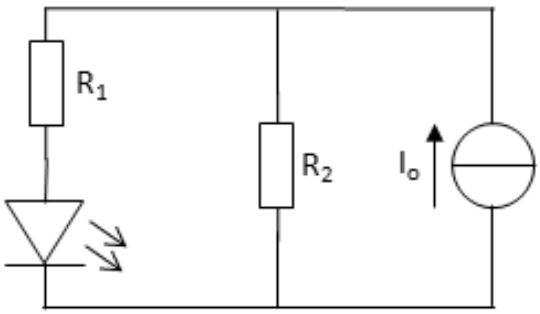

4. Assume the operational amplifier is ideal.

   (A) Assuming operation in the linear region, derive an expression for $V_{out}$ as a function of $V_{in}$, $R_1$ and $R_2$.

   (B) Whitin what voltage range must $V_{in}$ be to assure that the operational amplifier operates in the linear region? $R_1$=1 kΩ and $R_2$=4 kΩ

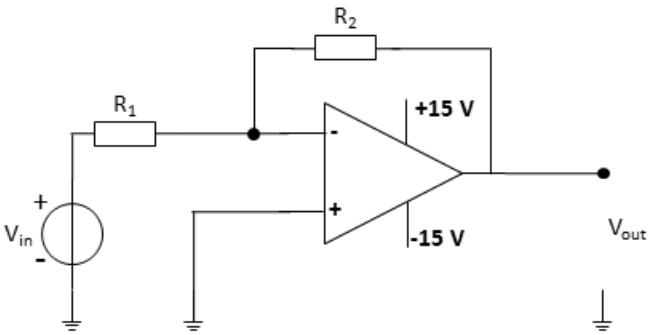


5. In the circuit below $V_o$=3 V, $R_1$=1 kΩ, $R_2$=2 kΩ, $R_3$=3 kΩ and C=10 nF.

   (A) The switch has been open for a long time. Calculate the RC time constant for charging up ($\tau_{up}$) the capacitor when the switch closes.

   (B) The switch has been closed for a long time. Calculate the RC time constant for discharging ($\tau_{down}$) the capacitor when the switch opens.

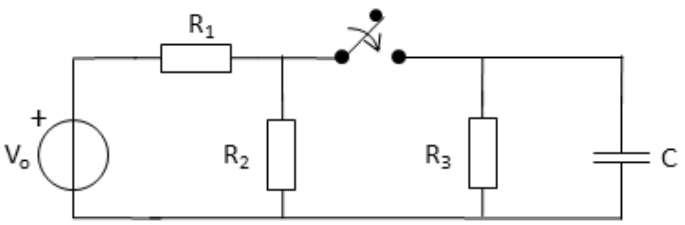


6. The current source in the circuit generates the current pulse shown in the figure below.

   (A) Derive a numerical expression for the voltage over the inductor, $V_L(t)$, in the interval 0<t<25 µs.

   (B) What is the energy stored in the inductor at t=25 µs?

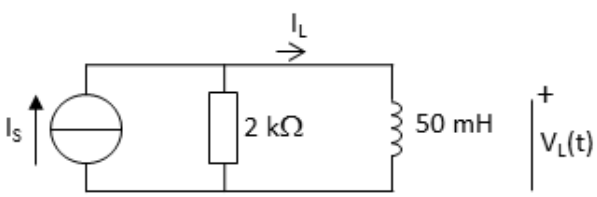


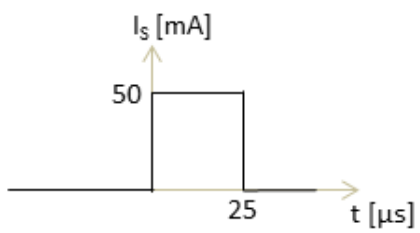

7. (A) Derive an expression for the impedance (Z) as a function of the angular frequency (ω) seen by the voltage source $v_s$.
   (B) Determine i(t) when the steady-state voltage source $v_s=\sqrt{2}\cos(\omega t)$, L=1 H, ω=1000 rad/s, R=1 kΩ and C=1 μF.

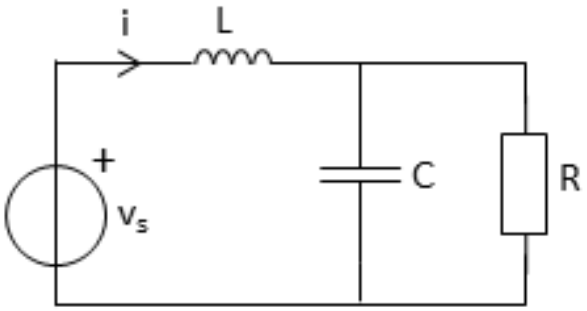


8. $v_{in}(t)$ is a steady-state cosine voltage source with amplitude A and frequency ω.

   (A) Derive a complex expression for $\frac{\hat{V}_{out}}{\hat{V}_{in}}$ that include ω, R and L.

   (B) What type of filter function does the circuit perform? Motivate your answer.

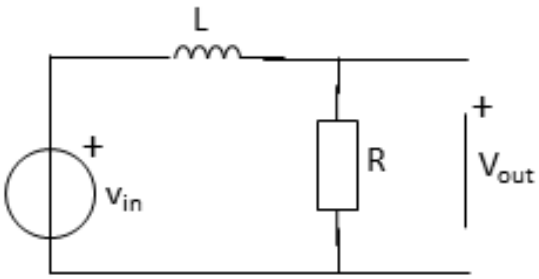

**Answers to written exam 17/8 2018**

1. 12.5 mW of power is consumed in R3
2. VTH= 4 V, RTH=1.33 kΩ
3. Io=2.5 mA
4. A) $V_{out} = -\frac{R_2}{R_1} V_{in}$ B) -3.75 <Vin<3.75 V
5. A) τup=5.5 μs B) τdown=30 μs
6. A) $V_L(t) = 100e^{-\frac{t}{25\mu s}}$ V B) 25 μJ
7. A) $Z = j\omega L + \frac{R}{1+j\omega RC}$ B) i(t)=2cos(ωt-45) mA
8. A) $\frac{\hat{V}_{out}}{\hat{V}_{in}} = \frac{1}{1+j\omega\frac{L}{R}}$
   B) ω→0 then $\frac{\hat{V}_{out}}{\hat{V}_{in}} \to 1$, ω→∞ then $\frac{\hat{V}_{out}}{\hat{V}_{in}} \to 0$
   This is an low pass filter