Reglerteknik Ö6

Köp övningshäfte på kårbokhandeln

William Sandqvist william@kth.se

10.1 Stabilitet

Vilka processer är stabila?

$a)\quad \ddot{y}+\dot{y}-6y=\dot{x}+x$

$b)\quad 2\ddot{y}+6\dot{y}-8y=3\dot{x}$

$c)\quad \ddot{y}+10\dot{y}+21y=\dot{x}+4x$

$d)\quad y'''+3y''-2y'+y=u'+5u$

$e)\quad y'''+7y''+y'+4y=u''+3u$

$f)\quad y'''+3y''+y'+6y=u'+7u$

$g)\quad \dfrac{s+2}{s^2-s-6}$

$h)\quad \dfrac{s^2+3s+2}{s+4}$

10.1 a lösning, Stabilitet

$$a) \quad \ddot{y} + \dot{y} - 6y = \dot{x} + x \quad \{L:\} \quad Ys^2 + sY - 6Y = Xs + X$$

$$\frac{Y}{X} = \frac{s+1}{\boxed{s^2 + s - 6}} \qquad s = -\frac{1}{2} \pm \sqrt{\tfrac{1}{4} + 6} = -\frac{1}{2} \pm \sqrt{\frac{25}{4}} = -\frac{1}{2} \pm \frac{5}{2}$$

$$\begin{cases} -3 \\ +2 \end{cases}$$

Pol i hhp
$\Rightarrow$ ostabilt

MATLAB

```
» pole(tf([1,1],[1,1,-6]))
ans =
    -3
     2
```

$b)$ **10.1 b** lösning, Stabilitet

$$2\ddot{y}+6\dot{y}-8y=3\dot{x} \quad \{L:\} \quad 2Ys^2+6sY-8Y=3sX$$

$$\frac{Y}{X}=\frac{3s}{\boxed{2s^2+6s-8}} \qquad s=-\frac{3}{2}\pm\sqrt{\tfrac{9}{4}+4}=-\frac{3}{2}\pm\frac{5}{3}$$

Pol i hhp, ostabilt

MATLAB

```
» pole(tf([3,0],[2,6,-8]))
ans =
    -4
     1
```

$c)$ **10.1 c** lösning, Stabilitet

$$\ddot{y}+10\dot{y}+21y=\dot{x}+4x \quad \{L:\} \quad Ys^2+10Ys+21Y=Xs+4X$$

$$\frac{Y}{X}=\frac{s+4}{\boxed{s^2+10s+21}} \qquad s=-5\pm\sqrt{25-21}=-5\pm 2$$

Polerna i vhp, stabilt

MATLAB

```
» pole(tf([1,4],[1,10,21]))
ans =
    -7
    -3
```

$d)$ **10.1 d** lösning, Stabilitet

$$y''' + 3y'' - 2y' + y = u' + 5u \quad \{L:\}$$

$$Ys^3 + 3Ys^2 - 2Ys + Y = Us + 5U \qquad \frac{Y}{U} = \frac{s+5}{\boxed{s^3 + 3s^2 - 2s + 1}}$$

Routh

$$s^3 + 3s^2 - 2s + 1$$

$$\begin{array}{ccc} 1 & -2 & 0 \\ 3 & 1 & 0 \\ -\frac{7}{3} & 0 & 0 \\ 1 & & \end{array}$$

$$\frac{3\cdot(-2) - 1\cdot 1}{3} = -\frac{7}{3}$$

MATLAB

```
» pole(tf([1,5],[1,3,-2,1]))
ans =
   -3.6274
   0.3137 + 0.4211i
   0.3137 - 0.4211i
```

Teckenbyte, pol i hhp, ostabilt

poler i hhp, ostabilt

William Sandqvist william@kth.se

10.2 Stabilitet

Är detta slutna system stabilt?

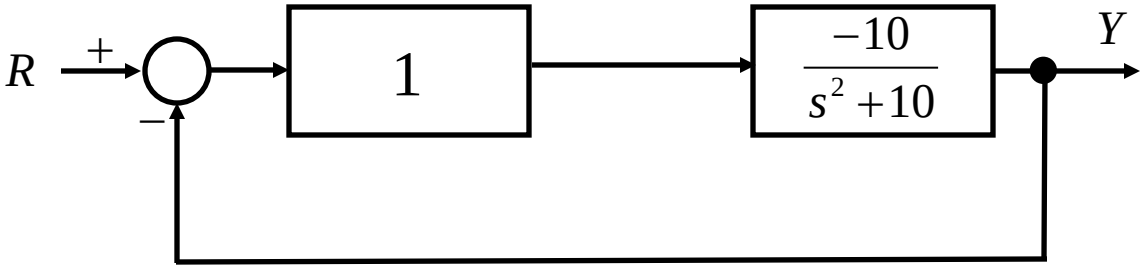

10.2 lösning, Stabilitet

Är detta slutna system stabilt?

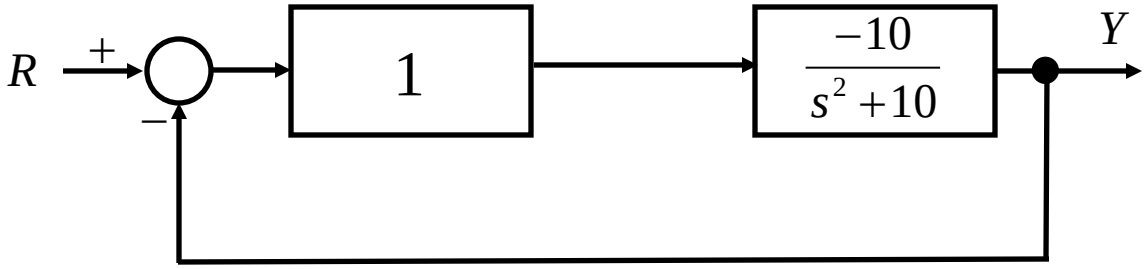

$$G(s)=\frac{1\cdot\frac{-10}{s^2-10}}{1+1\cdot\frac{-10}{s^2-10}}=\frac{-10}{s^2-10-10}=\frac{-10}{\boxed{s^2-20}}$$

$$s=\pm\sqrt{20}$$

pol i hhp, ostabilt

William Sandqvist william@kth.se

10.3 Stabilitet

Bestäm maximalt värde på K för stabilt system.

$a)$

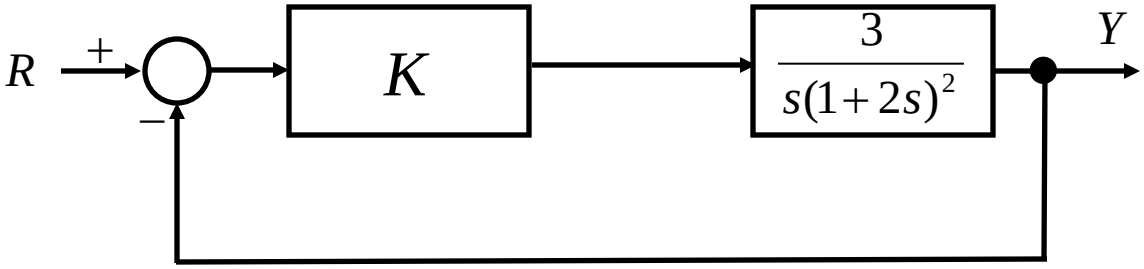

$b)$

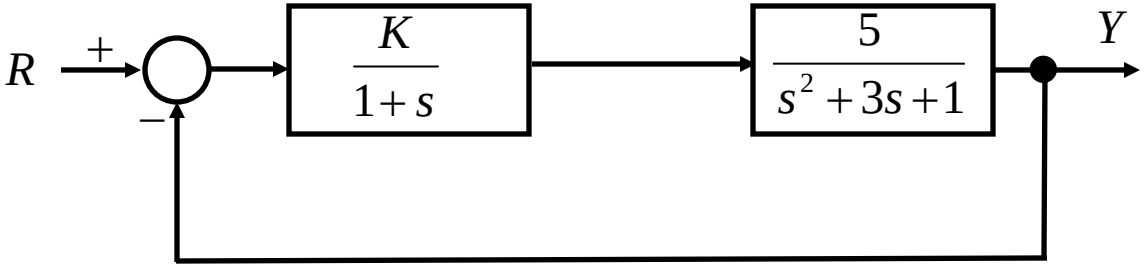

10.3 a lösning, Stabilitet

Bestäm maximalt värde på K för stabilt system.

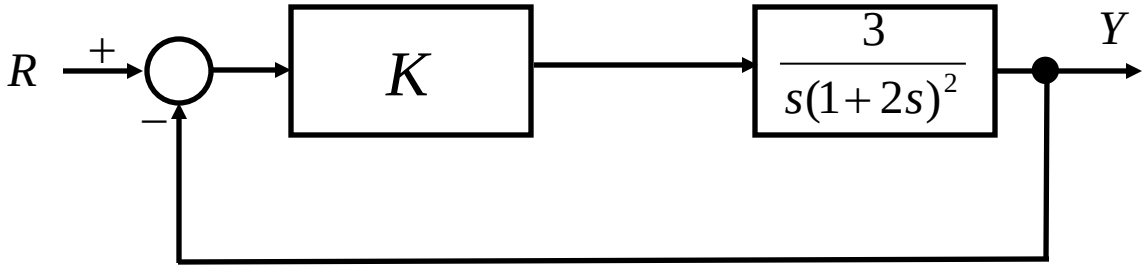

Vi använder det **öppna systemet** och **Bodeanalys**:

$$G(s) = \frac{3K}{s(1+2s)^2} \qquad \underline{G}(j\omega) = \frac{3K}{j\omega(1+2j\omega)^2} \qquad G(\omega) = \frac{3K}{\omega \cdot (1+4\omega^2)}$$

$$\angle \underline{G}(j\omega) = -\frac{\pi}{2} - \arctan 2\omega - \arctan 2\omega = -\frac{\pi}{2} - 2\arctan 2\omega$$

10.3 a lösning, Stabilitet

$$\boxed{\angle \underline{G}(j\omega) = -\frac{\pi}{2} - 2\arctan 2\omega}$$

- *Fasvilkor*: $-\pi = -\frac{\pi}{2} - 2\arctan 2\omega_\pi \quad \Rightarrow \quad -2\arctan 2\omega_\pi = -\frac{\pi}{2}$

$$\arctan 2\omega_\pi = \frac{\pi}{4} \quad \Rightarrow \quad 2\omega_\pi = 1 \quad \Rightarrow \quad \omega_\pi = \frac{1}{2}$$

$$\boxed{G(\omega) = \frac{3K}{\omega \cdot (1 + 4\omega^2)}} \qquad G(\omega = \tfrac{1}{2}) = \frac{3K}{0{,}5 \cdot (1 + 4 \cdot 0{,}5^2)} = \frac{3K}{1}$$

- *Amplitudvilkor*:

$$3K < 1 \quad \Rightarrow \quad \boxed{K < \tfrac{1}{3}}$$

William Sandqvist william@kth.se

10.3 b lösning, Stabilitet

Bestäm maximalt värde på K för stabilt system.

$b)$

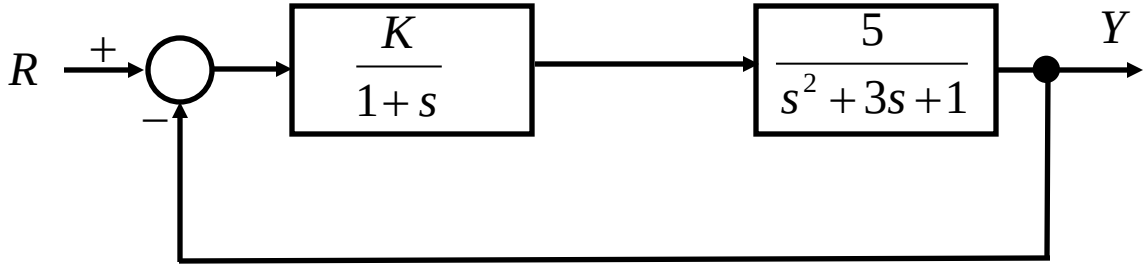

Vi använder det **slutna systemet** och **Routh-tabell**

$$G(s) = \frac{\frac{K}{1+s} \cdot \frac{5}{s^2+3s+1}}{1+\frac{K}{1+s} \cdot \frac{5}{s^2+3s+1}} = \frac{5K}{(1+s)\cdot(s^2+3s+1)+5K} =$$

$$= \frac{5K}{\boxed{s^3+4s^2+4s+(1+5K)}}$$

10.3 b lösning, Stabilitet

Routh-tabell

$$s^3 + 4s^2 + 4s + (1+5K)$$

1	4	0
4	$1+5K$	0
$\frac{4\cdot 4-(1+5K)}{4}$	*Vi stoppar här.*	

$$\frac{4\cdot 4-(1+5K)}{4} > 0$$

$$16-1-5K > 0$$

$$\boxed{K < 3}$$

William Sandqvist william@kth.se

10.4 Stabilt område parametrar

Bestäm vilka värden (områden) *a* och *b* får ha för att ge stabila överföringsfunktioner med nämnarpolynomen.

$$a) \quad s^3 + as^2 + s + b$$

$$b) \quad as^3 + bs^2 + s + 1$$

10.4 a lösning, Stabilt område

Routh-tabell

$$s^3 + as^2 + s + b$$

$$\begin{array}{ccc} 1 & 1 & 0 \\ a & b & 0 \\ \frac{a-b}{a} & 0 & 0 \\ b & 0 & 0 \end{array}$$

$$a > 0$$

$$\frac{a-b}{a} > 0 \quad \Rightarrow \quad a - b > 0 \quad \Rightarrow \quad \boxed{a > b}$$

$$b > 0$$

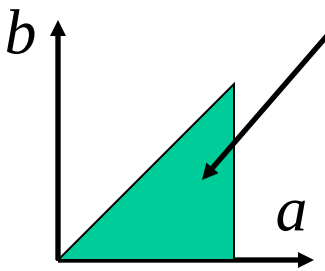

10.4 b lösning, Stabilt område

Routh-tabell

$$as^3 + bs^2 + s + 1$$

$$\begin{array}{c|ccc} a & 1 & 0 & a > 0 \\ b & 1 & 0 & b > 0 \\ \frac{b-a}{b} & 0 & 0 & \frac{b-a}{a} > 0 \\ 1 & 0 & 0 & \end{array} \quad \Rightarrow \quad b - a > 0 \quad \Rightarrow \quad \boxed{b > a}$$

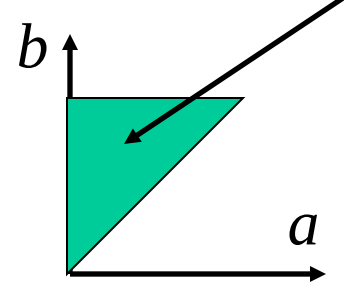

William Sandqvist william@kth.se

10.7 Marginaler ur Bodediagram

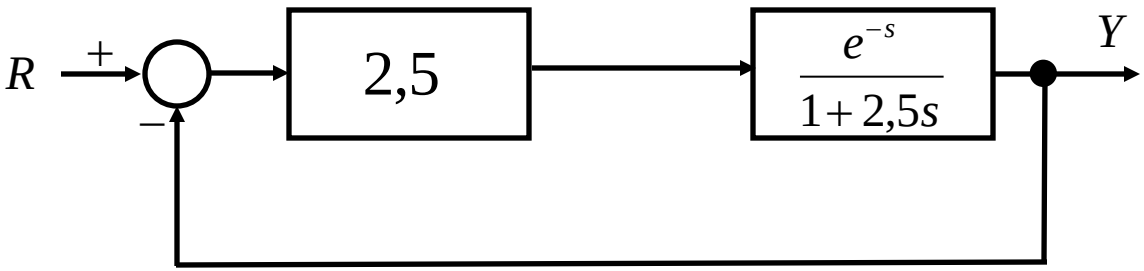

10.7 Lösning, Marginaler

openloop:

$$G(s) = \boxed{e^{-s}} \cdot \boxed{\frac{2,5}{1+2,5s}}$$

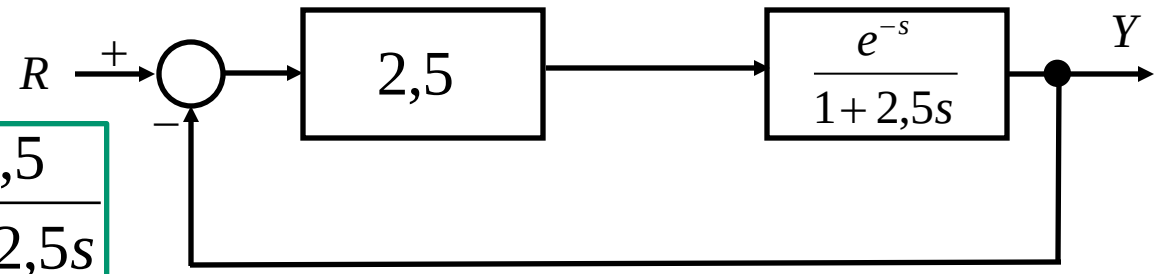

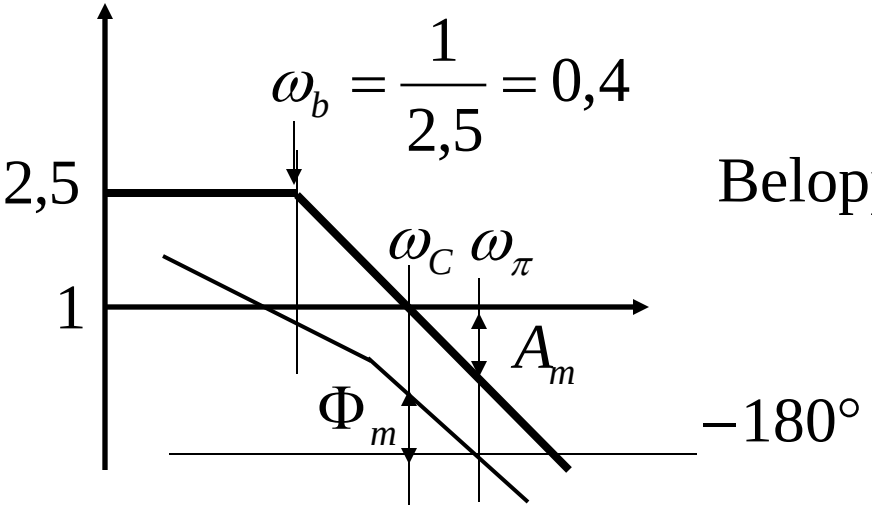

Fasfunktion:

$$\phi(\omega) = \boxed{-\omega}\ \boxed{-\arctan(2,5\omega)}$$

Beloppsfunktion:

$$A(\omega) = \boxed{1} \cdot \boxed{\frac{2,5}{\sqrt{1+(2,5\omega)^2}}}$$

10.7 Lösning, Marginaler Φ_m

$$\boxed{A(\omega) = 1 \cdot \frac{2{,}5}{\sqrt{1+(2{,}5\omega)^2}}}$$

$$\Rightarrow \quad A(\omega_C) = 1 = \frac{2{,}5}{\sqrt{1+(2{,}5\omega_C)^2}} \quad \Leftrightarrow \quad 2{,}5^2 = 1+(2{,}5\omega_C)^2 \quad \Rightarrow$$

$$\Rightarrow \quad \omega_C = \frac{\sqrt{6{,}25-1}}{2{,}5} = 0.92$$

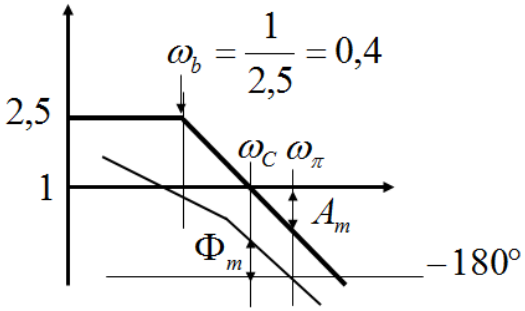

$$\boxed{\varphi(\omega) = -\omega - \arctan(2{,}5\omega)}$$

$$\Rightarrow \quad \varphi(\omega_C) = -0{,}92 - \arctan(2{,}5 \cdot 0{,}92) = -2{,}08 \cdot \frac{180°}{\pi} = -119°$$

$$\boxed{\Phi_m} = \left|(-180°) - \varphi(\omega_C)\right| = 180° - 119° = \boxed{61°}$$

William Sandqvist william@kth.se

10.7 Lösning, Marginaler ω_π

$$\boxed{\phi(\omega) = -\omega - \arctan(2,5\omega)}$$

Svårt att lösa ut ω ?
Räta linjens ekvation i stället …

En punkt till …

$$\Rightarrow \quad \phi(\omega = 2) = -2 - \arctan(2,5 \cdot 2) = -3,37\frac{180°}{\pi} = -193°$$

$$\omega_C = 0.92$$
$$\varphi(\omega_C) = -119°$$

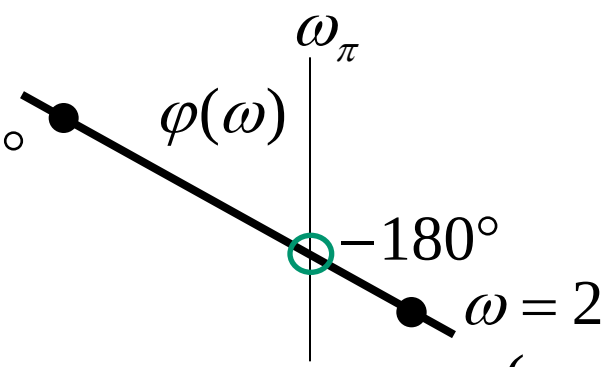

$$\omega = 2$$
$$\varphi(\omega = 2) = -193°$$

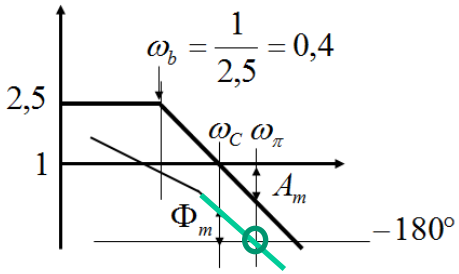

Räta linjens ekv.

$$\boxed{\omega_\pi} = 0.92 + (2 - 0,92) \cdot \frac{180 - 119}{193 - 119} = \boxed{1,81}$$

William Sandqvist william@kth.se

10.7 Lösning, Marginaler A_m

$$\boxed{A(\omega) = 1 \cdot \frac{2{,}5}{\sqrt{1+(2{,}5\omega)^2}}}$$

$$A(\omega_\pi = 1{,}81) = \frac{2{,}5}{\sqrt{1+(2{,}5 \cdot 1{,}81)^2}} = 0{,}54$$

$$\boxed{A_m} = \frac{1}{A(\omega_\pi)} = \frac{1}{0{,}54} = \boxed{1{,}85 \text{ ggr}}$$

10.7 Lösning, Marginaler

$\omega_b = 0{,}4 \quad \omega_C = 0.92 \quad \omega_\pi = 1{,}81$

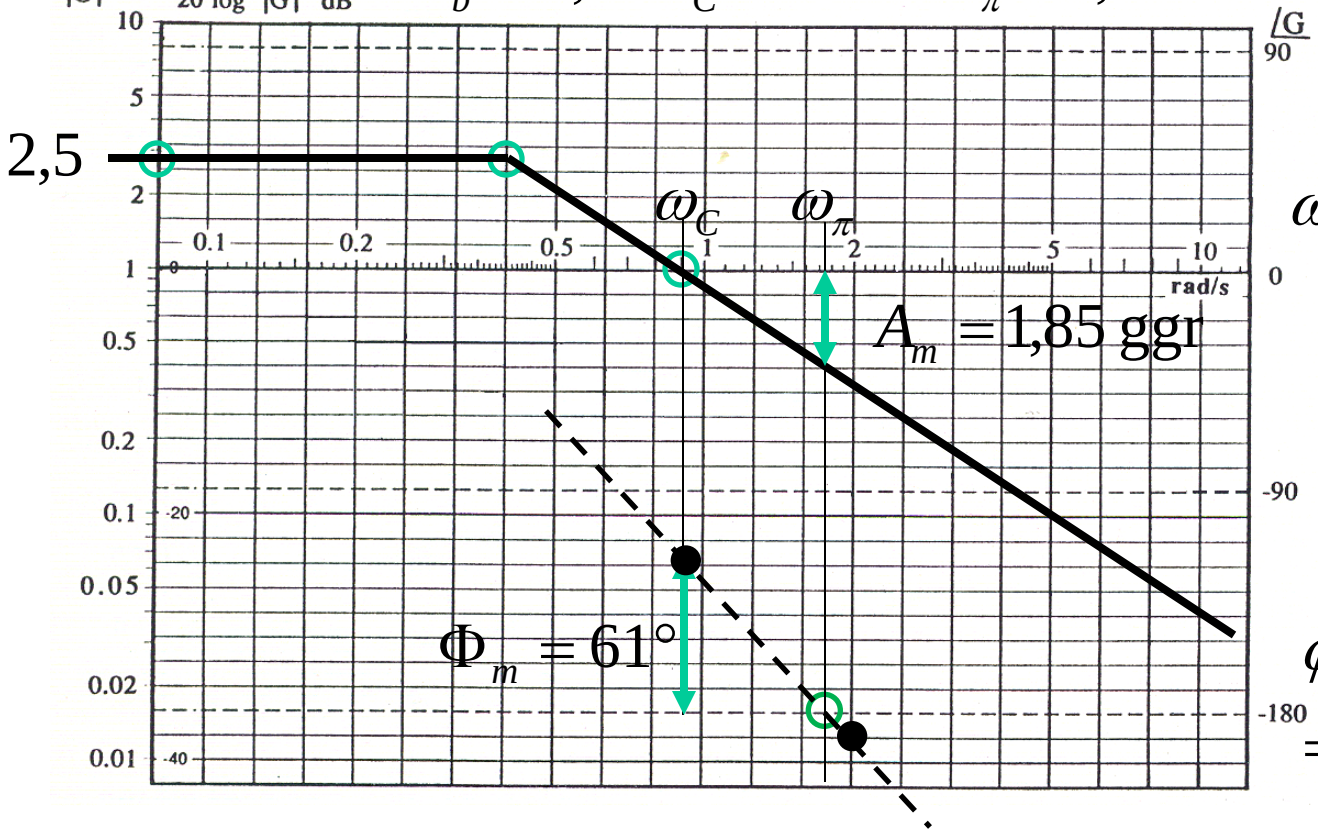

$\omega_\pi = 1{,}81$

$\varphi(\omega_C) =$

$= -119°$

$\phi(\omega = 2) =$

$= -193°$

William Sandqvist william@kth.se

10.9 Marginal med Rouths metod

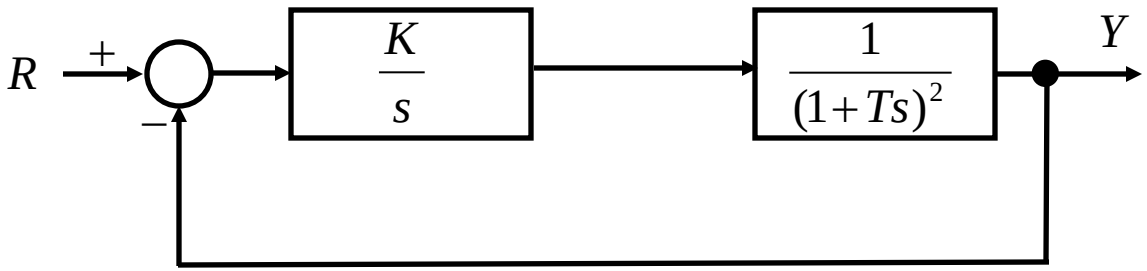

Välj K så att $A_m = 2$ ggr.

10.9 Lösning, Rouths metod

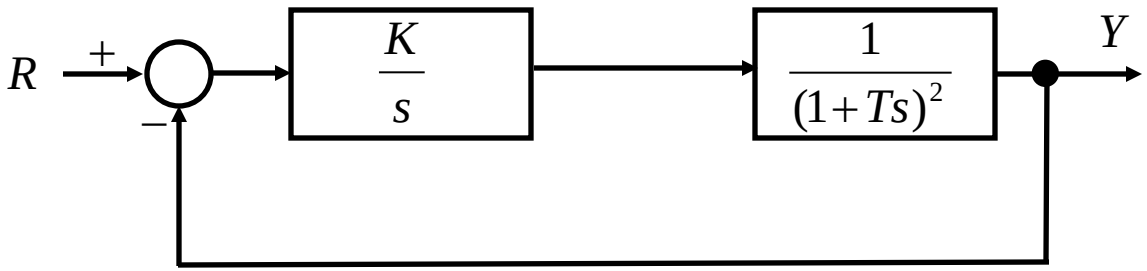

$$\frac{Y}{R} = \frac{\frac{K}{s} \cdot \frac{1}{(1+Ts)^2}}{1 + \frac{K}{s} \cdot \frac{1}{(1+Ts)^2}} = \frac{K}{\boxed{T^2 s^3 + 2Ts^2 + s + K}}$$

10.9 Lösning, Rouths metod

$$T^2 s^3 + 2Ts^2 + s + K$$

Routh tabell

T^2	1	0
$2T$	K	0
$\frac{2T - T^2 K}{2T}$	0	0
K	0	0

$$T > 0$$

$$\frac{2 - TK}{2} > 0 \Rightarrow TK < 2$$

$$K > 0$$

$$K_{\max} = \frac{2}{T} \quad A_m = 2 \quad \Rightarrow \frac{K_{\max}}{2} \quad \Rightarrow \quad \boxed{K = \frac{1}{T}}$$

William Sandqvist william@kth.se

10.11 Statisk noggrannhet

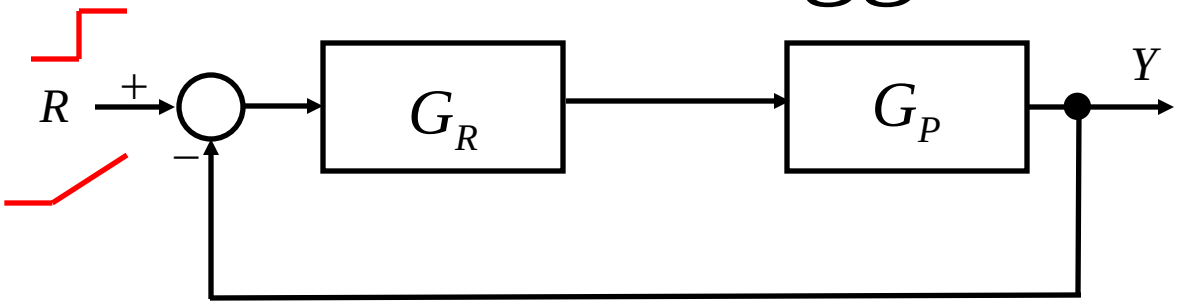

$$a) \quad G_R = \frac{2s+3}{s+2} \quad G_P = \frac{2}{s(5s+1)}$$

$$b) \quad G_R = \frac{s+2}{s+1} \quad G_P = \frac{10}{s+4}$$

10.11 a lösning statiska fel

$$a) \quad G_R = \frac{2s+3}{s+2} \qquad G_P = \frac{2}{s(5s+1)}$$

$$a \Rightarrow e_0 = 0$$

Stegformad börvärdesändring. Om G_R eller G_P är integrerande blir det *inget* kvarvarande fel, $\boxed{e_0 = 0}$

Rampformad börvärdesändring.

$$h \qquad \boxed{e_l = \lim_{s \to 0} \frac{h}{s \cdot (1 + G_R \cdot G_P)}}$$

fortsättning …

10.11 a lösning statiska fel

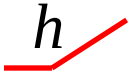

$$G_R = \frac{2s+3}{s+2} \qquad G_P = \frac{2}{s(5s+1)}$$

$$\boxed{e_l = \lim_{s\to 0} \frac{h}{s\cdot(1+G_R\cdot G_P)}} = \lim_{s\to 0} \frac{h}{s\cdot\left(1+\frac{2s+3}{s+2}\cdot\frac{2}{s(5s+1)}\right)} =$$

$$= \lim_{s\to 0} \frac{h}{\cancel{s}\left(\frac{s(s+2)(5s+1)+2(2s+3)}{\cancel{s}(s+2)(5s+1)}\right)} = \lim_{s\to 0} \frac{h}{\frac{2\cdot 3}{2\cdot 1}} = \boxed{\frac{h}{3}}$$

William Sandqvist william@kth.se

William Sandqvist william@kth.se

10.11 b lösning statiska fel

$$b) \quad G_R = \frac{s+2}{s+1} \qquad G_P = \frac{10}{s+4}$$

a Kvarvarande fel efter stegformad börvärdesändring.

$$\boxed{e_0 = \lim_{s\to 0} \frac{a}{1+G_R \cdot G_P}} = \lim_{s\to 0} \frac{a}{1+\frac{s+3}{s+1}\cdot\frac{10}{s+4}} = \frac{a}{1+\frac{20}{1\cdot 4}} = \boxed{\frac{a}{6}}$$

h Kvarvarande fel efter rampformad börvärdesändring.

$$\boxed{e_l = \lim_{s\to 0} \frac{h}{\underbrace{\boxed{s}}_{=0}\cdot(1+G_R \cdot G_P)}}$$

ingen integrering! $\Rightarrow \boxed{e_1 = \infty}$

William Sandqvist william@kth.se

10.12 Statisk noggrannhet

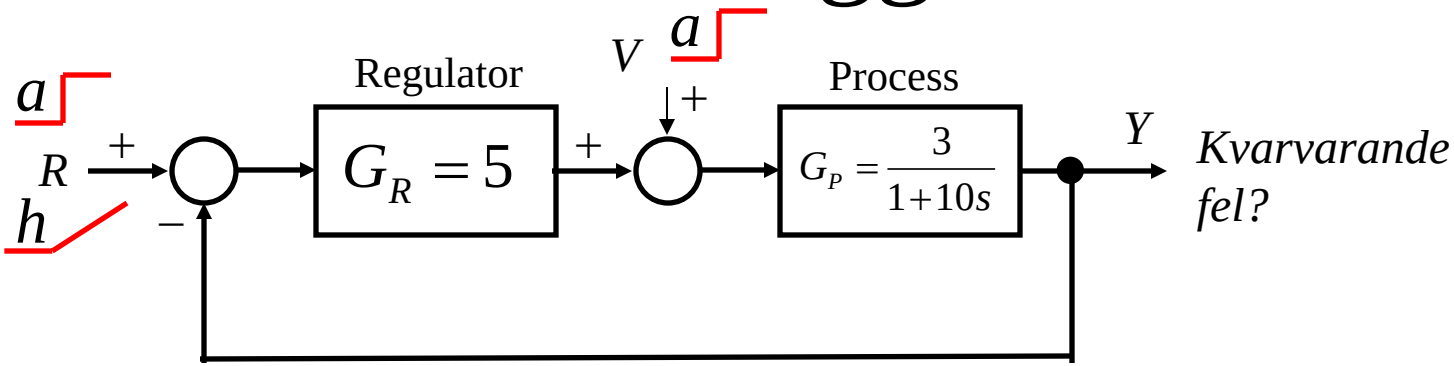

$$a)\ \frac{Y}{R} \quad e_0 = ? \qquad b)\ \frac{Y}{R} \quad e_1 = ? \qquad c)\ \frac{Y}{V} \quad e_V = ?$$

10.12 a lösning statiska fel

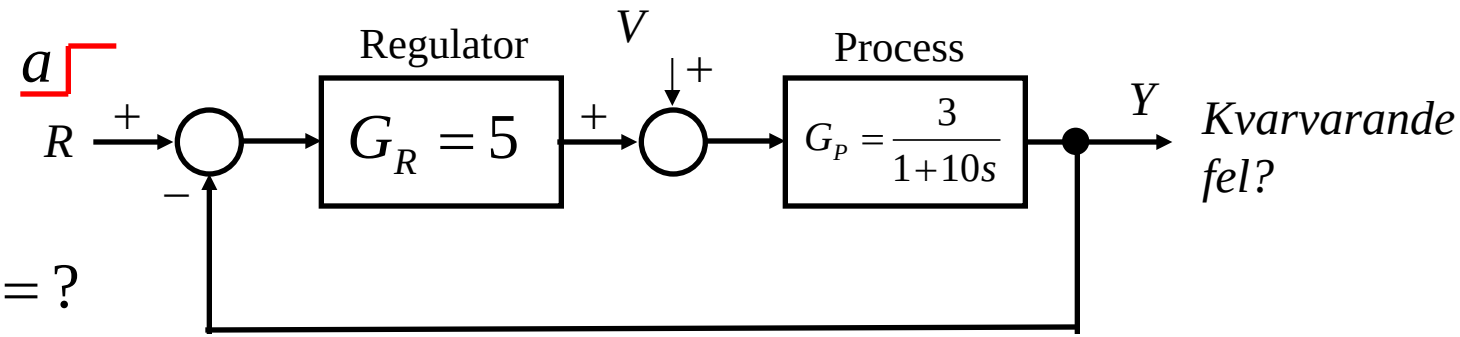

$$a)\ \frac{Y}{R} \qquad e_0 = ?$$

$$\boxed{e_0 = \lim_{s\to 0} \frac{a}{1+G_R \cdot G_P}} = \lim_{s\to 0} \frac{a}{1+5\cdot\frac{3}{1+10s}} = \frac{a}{1+\frac{15}{1}} = \boxed{\frac{a}{16}}$$

William Sandqvist william@kth.se

10.12 b lösning statiska fel

$b)\ \dfrac{Y}{R}$ $\quad e_1 = ?$

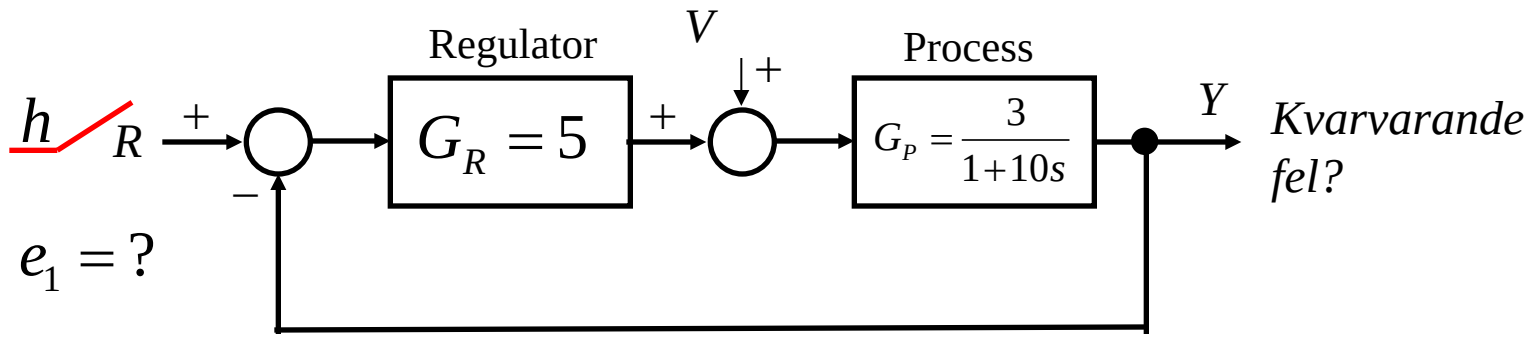

$$\boxed{e_l = \lim_{s\to 0} \frac{h}{\boxed{s}\cdot(1+G_R\cdot G_P)} = 0}$$

ingen integrering! $\Rightarrow \boxed{e_1 = \infty}$

William Sandqvist william@kth.se

10.12 c lösning statiska fel

$c)\ \dfrac{Y}{V} \quad e_V = ?$

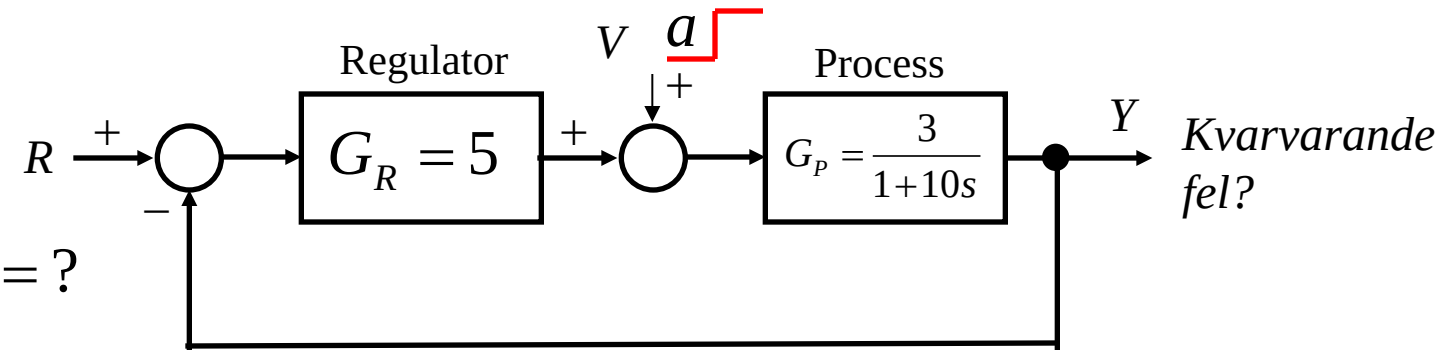

$$\boxed{e_V = \lim_{s\to 0} \frac{-G_P a}{1+G_R \cdot G_P}} = \lim_{s\to 0} \frac{-\dfrac{3a}{1+10s}}{1+5\cdot\dfrac{3}{1+10s}} = \frac{a}{1+\dfrac{15}{1}} = \boxed{-\frac{3a}{16}}$$

William Sandqvist william@kth.se

10.13 Statisk noggrannhet

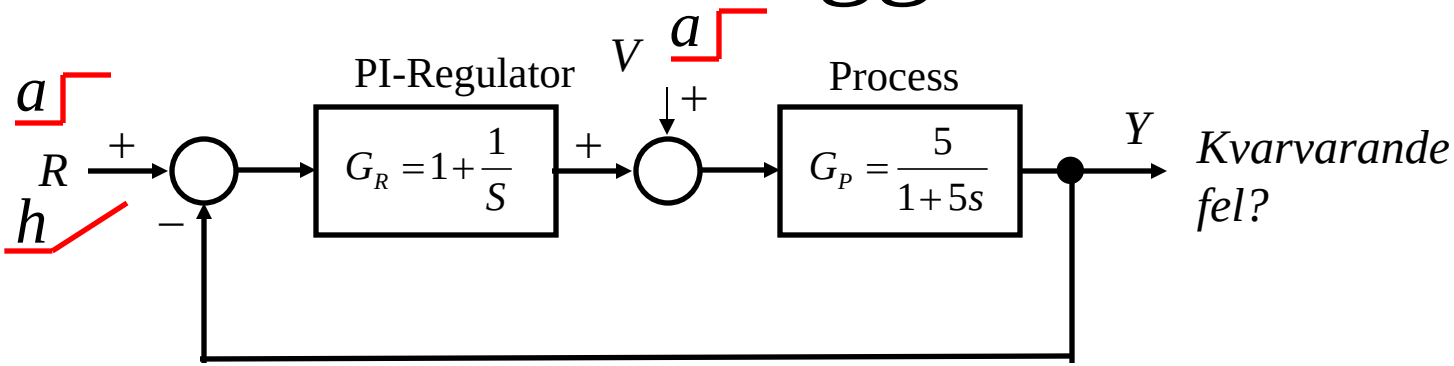

$$\frac{Y}{R} \quad e_0 = ? \qquad \frac{Y}{R} \quad e_1 = ? \qquad \frac{Y}{V} \quad e_V = ?$$

10.13 lösning statiska fel

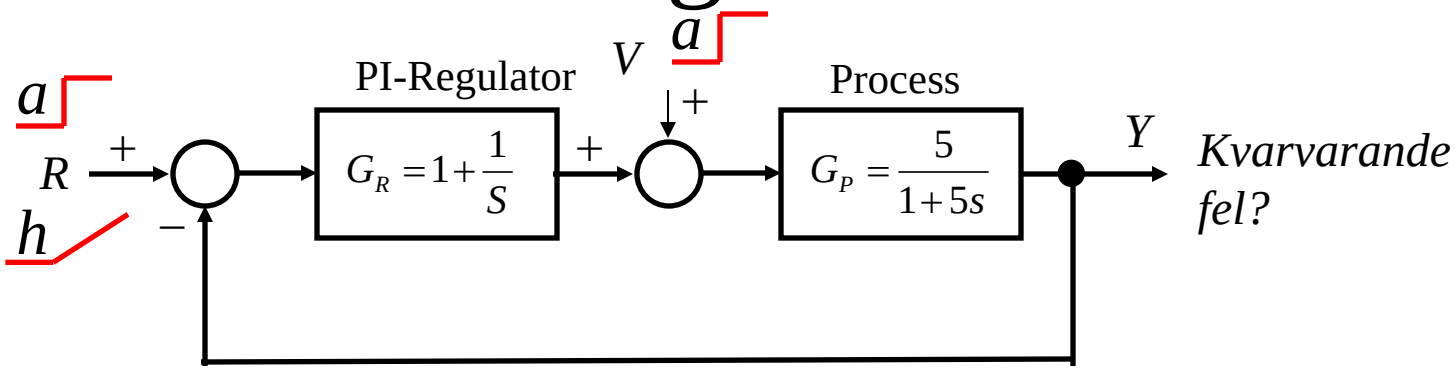

$$G_R \cdot G_P = \left(1 + \frac{1}{s}\right) \cdot \left(\frac{5}{1+5s}\right)$$

Integrering! $\boxed{e_0 = e_V = 0}$

$$\boxed{\begin{array}{l} h \\ e_l = \lim_{s \to 0} \dfrac{h}{s \cdot (1 + G_R \cdot G_P)} \end{array}} = \lim_{s \to 0} \frac{h}{s \cdot \left(1 + \left(1 + \frac{1}{s}\right) \cdot \frac{5}{1+5s}\right)} = \lim_{s \to 0} \frac{h}{s + \frac{5(s+1)}{1+5s}} = \boxed{\frac{h}{5}}$$

William Sandqvist william@kth.se

William Sandqvist william@kth.se

10.20 Störningsdämpning

a) Hur stor amplitud får $y(t)$ från $v(t)$?
b) Hur stor amplitud får $y(t)$ från $v(t)$ om en P-regulator med $K = 3$ används?

a)

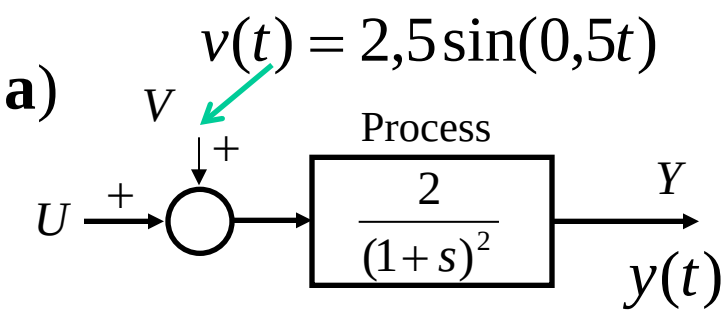

b)

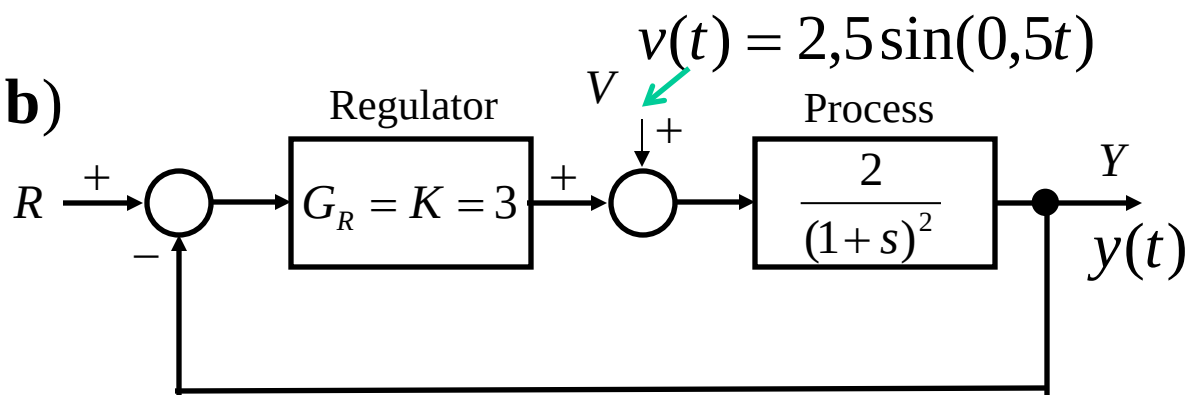

William Sandqvist william@kth.se

10.20 lösn Störningsdämpning

$$a) \quad G(s) = \frac{2}{(1+s)^2} \qquad G(\omega) = \frac{2}{1+\omega^2}$$

$$G(\omega = 0{,}5) = \frac{2}{1+0{,}5^2} = \boxed{1{,}6}$$

$$b) \quad G(s) = \frac{Y}{V} = \frac{G_P}{1+G_R G_P} = \frac{\dfrac{2}{(1+s)^2}}{1+3\cdot\dfrac{2}{(1+s)^2}} = \frac{2}{(1+s)^2+6} = \frac{2}{s^2+2s+7}$$

$$G(\omega) = \frac{2}{\sqrt{(7-\omega)^2+4\omega^2}} \qquad G(\omega = 0{,}5) = \frac{5}{\sqrt{6{,}75^2+1}} = \boxed{0{,}73}$$

William Sandqvist william@kth.se

William Sandqvist william@kth.se

10.21 Störningsdämpning

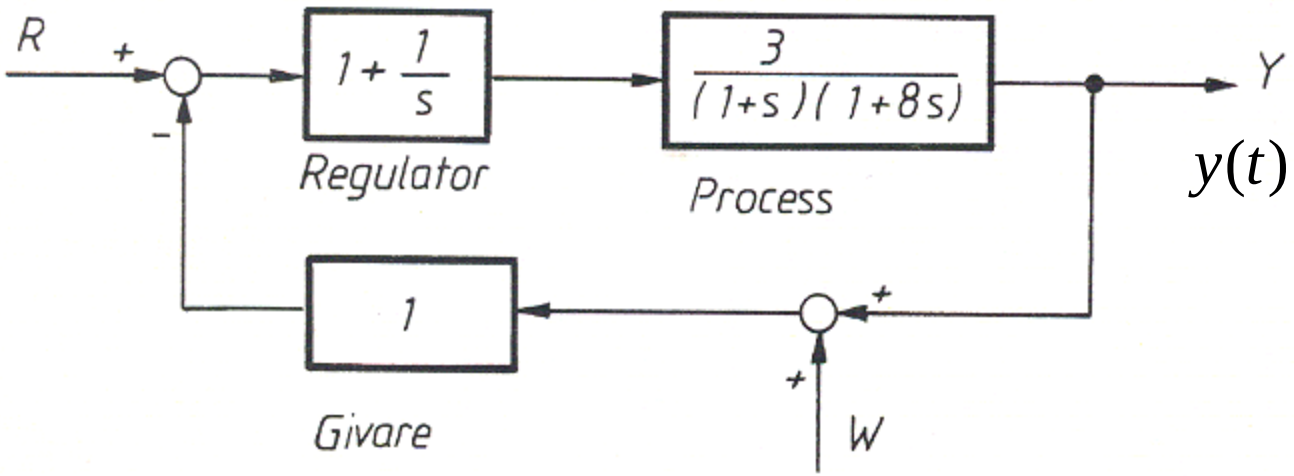

$$y(t) = ?$$

$$w(t) = 3{,}2\sin(2t)$$

10.21 lösn Störningsdämpning

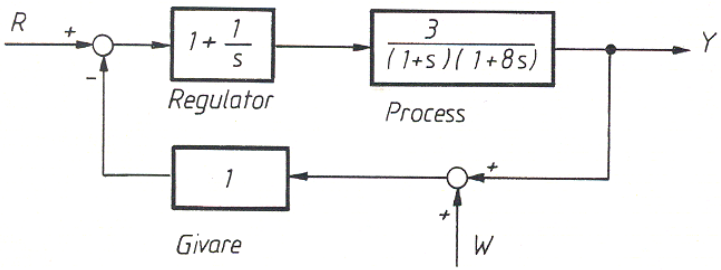

$$-W \approx R \qquad G(s) = \frac{Y}{W} = \frac{-G_R G_P}{1 + G_R G_P}$$

$$G(s) = \frac{-\left(1+\frac{1}{s}\right)\cdot\dfrac{3}{(1+s)(1+8s)}}{1+\left(1+\frac{1}{s}\right)\cdot\dfrac{3}{(1+s)(1+8s)}} = \frac{3\left(1+\frac{1}{s}\right)}{(1+s)(1+8s)+3\left(1+\frac{1}{s}\right)} = \frac{3+3s}{8s^3+9s^2+4s+3}$$

$$\underline{G}(j\omega) = \frac{3+3j\omega}{-8j\omega^3-9\omega^2+4j\omega+3} \qquad G(\omega=2) = \frac{3{,}2\sqrt{9+36}}{\sqrt{(3-36)^2+(8-69)^2}} = \boxed{0{,}33}$$

William Sandqvist william@kth.se

William Sandqvist william@kth.se